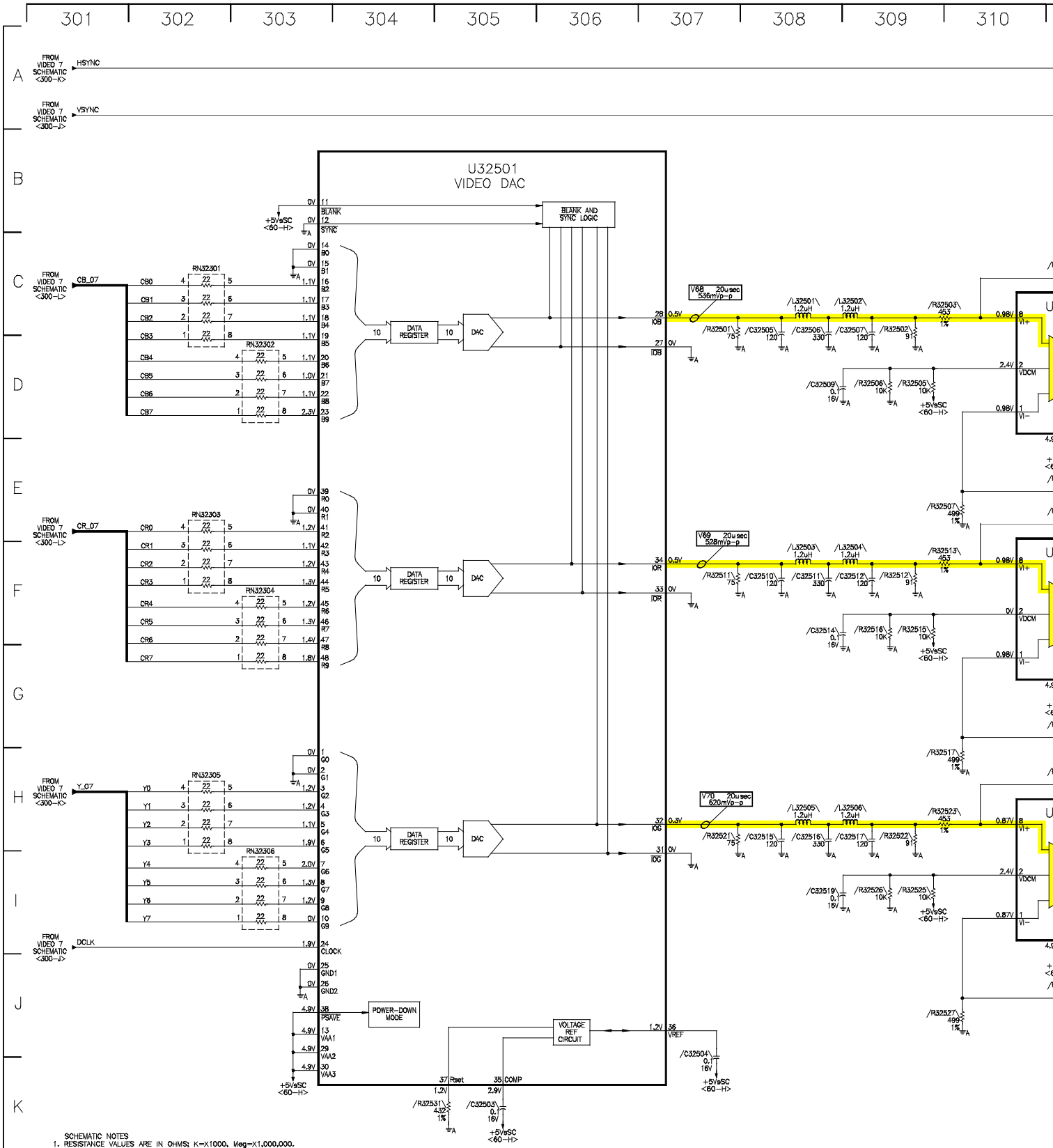

SCHEMATIC NOTES

1. RESISTANCE VALUES ARE IN OHMS; K=X1000, Meg=X1,000,000. RESISTORS ARE 1/4W 5%, EXCEPT WHERE INDICATED.
   [ ] INDICATES FLAT MAXI-CHIP COMPONENT, 1/8W EXCEPT WHERE INDICATED.
   / \ INDICATES FLAT MINI-CHIP COMPONENT, 1/16W EXCEPT WHERE INDICATED.
2. CAPACITANCE VALUES 1.0 AND ABOVE ARE IN µF, VALUES BELOW 1.0 ARE IN PF EXCEPT WHERE INDICATED. VOLTAGE RATING IS 50V EXCEPT WHERE INDICATED.
   [ ] INDICATES FLAT MAXI-CHIP COMPONENT.
   / \ INDICATES FLAT MINI-CHIP COMPONENT.
   \ / INDICATES FLAT MINI-CHIP COMPONENT.
3. ⏚ DENOTES CHASSIS GROUND. ⊗ INDICATES CONNECTION VIA POINT-TO-POINT WIRE.
   —INDICATES JUMPER WIRE.
   —INDICATES ZERO OHM CHIP COMPONENT.

07/09/01 09:24 15658020-08-00-TO-CTC210VIDEO8 60_VIDEO_B

ALL INTEGRATED CIRCUITS AND MANY OTHER SEMICONDUCTORS ARE ELECTROSTATICALLY SENSITIVE AND REQUIRE SPECIAL HANDLING TECHNIQUES DESCRIBED UNDER "ELECTROSTATICALLY SENSITIVE (ES) DEVICES" IN THE SAFETY AND SERVICING PRECAUTIONS PUBLICATION.

PRODUCT SAFETY NOTE

COMPONENTS WITH A ⚠ HAVE SPECIAL CHARACTERISTICS IMPORTANT TO SAFETY. BEFORE REPLACING ANY OF THESE COMPONENTS READ CAREFULLY THE PRODUCT SAFETY NOTICE IN THIS SERVICE DATA. DO NOT DEGRADE THE SAFETY OF THE SET THROUGH IMPROPER SERVICING.

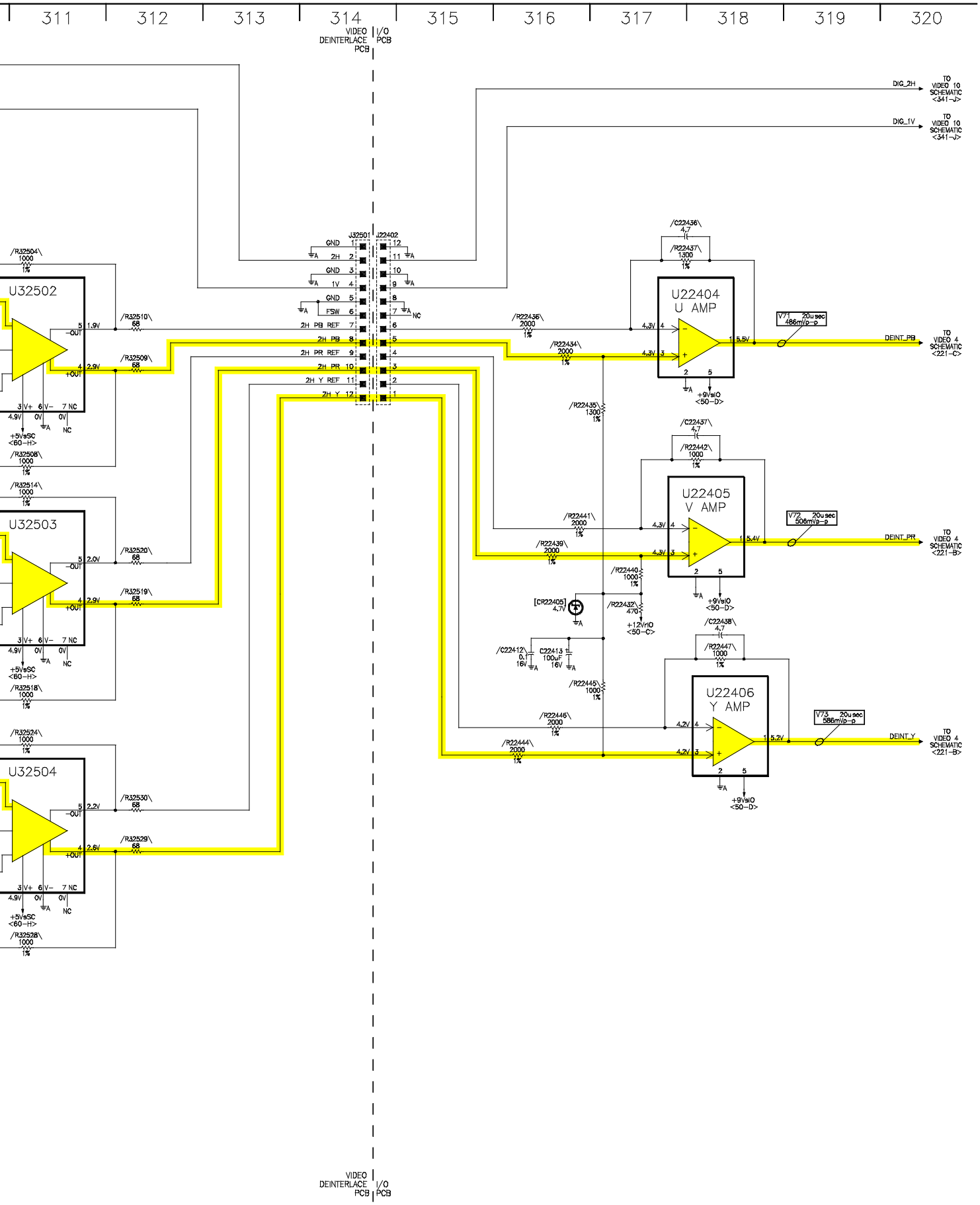
311
312
313
314
315
316
317
318
319
320
VIDEO DEINTERLACE PCB
I/O PCB
DIG_2H
DIG_1V
TO VIDEO 10 SCHEMATIC <341-V>
J32501
J22402
GND
2H
1V
FSW
2H PB REF
2H PB
2H PR REF
2H PR
2H Y REF
2H Y
NC
U32502
U32503
U32504
U22404 U AMP
U22405 V AMP
U22406 Y AMP
V71 20u sec 486mVp-p
V72 20u sec 506mVp-p
V73 20u sec 586mVp-p
DEINT_PB
DEINT_PR
DEINT_Y
TO VIDEO 4 SCHEMATIC <221-C>
TO VIDEO 4 SCHEMATIC <221-B>
+5VsSC <60-H>
+9VsIO <50-D>
+12VnO <50-C>
[CR22405] 4.7V
/C22412\ 0.1 16V
C22413 100uF 16V